Sl no	Brand	Furniture Name / Application	Location	UNIQUE ORDER CODE	WIRE LENGTH (ONE SIDE)	ACCESSORIES	LUMEN/WATT	LED STRIP	NO.OF LED
89	MIA	4 Tray Display Unit FRTC0093	4 tray Flatbed	MIA CABILITE 089	1000MM		160LM/WATT	DGST-2835-SP12 V2-120-SS	120 LED/MTR.

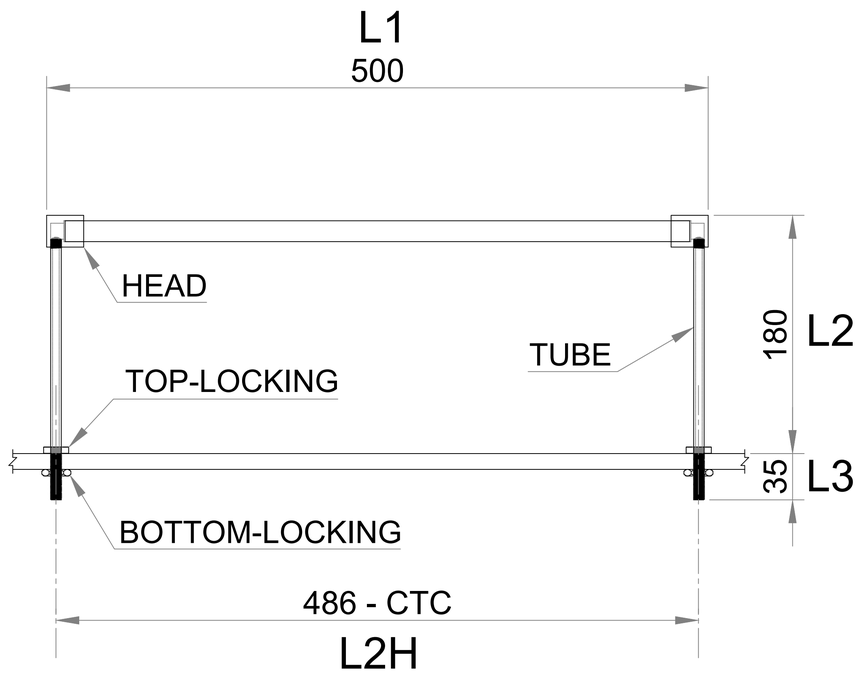

89 – 4 Tray Display Unit FRTC0093

CABI-LITE
17.80 x 15.80 mm

Product: Cabi-lite		digiopto 201, Anila Shanti Industrial Estate, Building No 2, New Dhumal Nagar, Waliv, Vasai [East] Dist. Palghar-401 210. INDIA.W:digiopto.com	CLIENT: TITAN	APRD. BY: M.S.M.	APRD. DATE: 26.12.2022	SCALE: N.T.S.	SHEET: 1
Profile: 17.8 x 15.8							
color: Silver finish			PROJECT: MIA	CHKD. BY: P.R.	CHKD. DATE: 26.12.2022	TITLE: LED LIGHT AREA	
Total Mtr.: 0.500 Mtr	Supply: 12 VDC						
CCT: 4000K				DRWN. BY: M.D.P.	DRWN. DATE: 26.12.2022	DRG. NO.: DO-20221226-89	REV. R0
Wattage: 19.2W/Mtr.			LOCATION : -	P.I.No.:			

A4

CAD FILE :- D:\DIGIOPTO 2023\PROJECT – TITAN MASTER